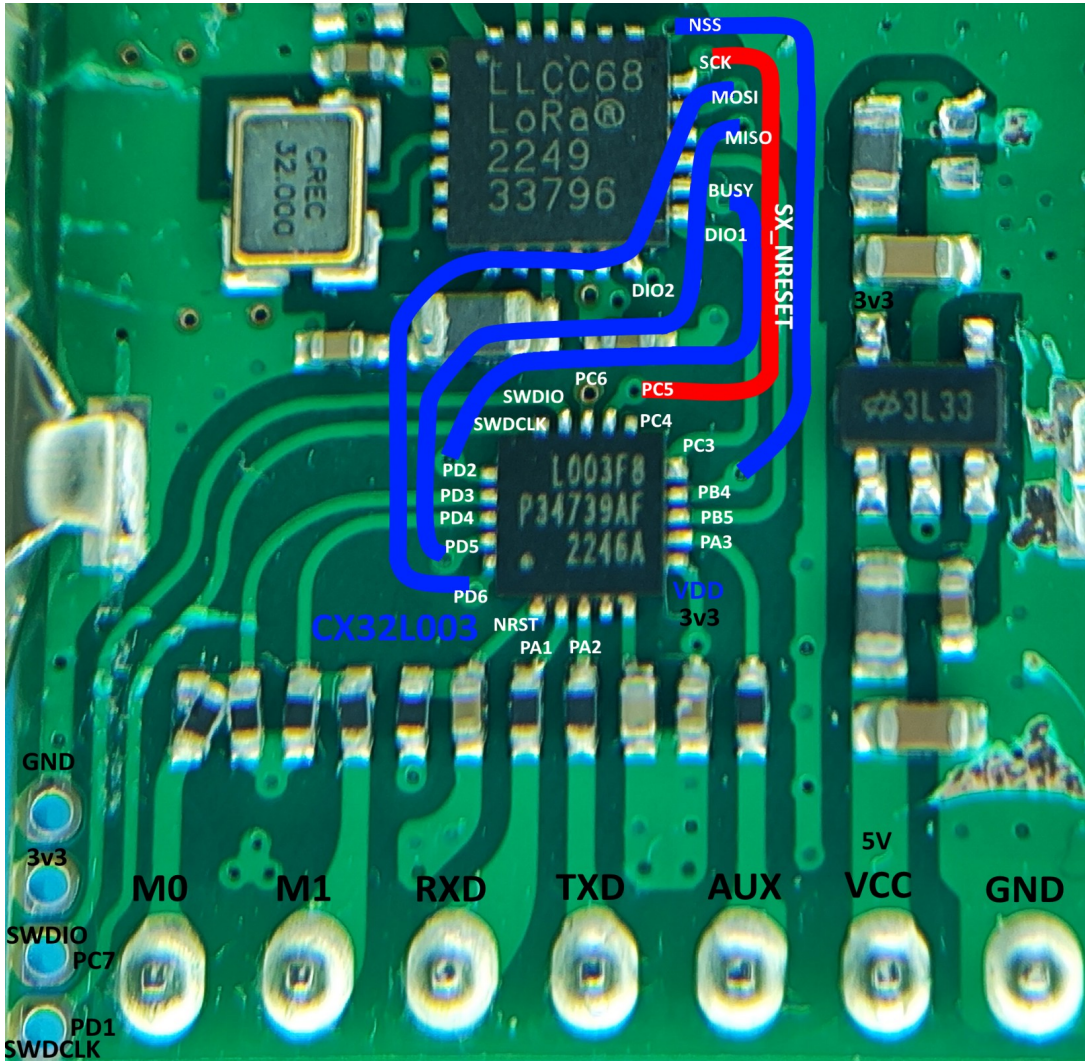Pin N°	Pin Name	Pin Type	Config	AFR0	ARF1	AFR2	AFR3	AFR4	AFR5	AFR6	AFR7	AFR8	AFRF	Default Function E220-900T22D (CX32L003F8 / LLCC68)
1	NRST	I/O	-	-	-	-	-	-	-	-	-	-	-	CX32L003 Reset (Requires PCBite probe)
2	OSCIN/PA1	I/O	OSC_IN	**PA1**	TIM1_CH2N	-	SPI_CLK	**I2C_SDA**	UART0_RXD	TIM10_TOG	**UART1_RXD**	-	-	**RXD can be reused (CX32L003 UART1_RXD or GPIO or I2C_SDA)**
3	OSCOUT/PA2	I/O	OSC_OUT	**PA2**	TIM1_CH3	-	SPI_NSS	**I2C_SCL**	UART0_TXD	TIM10_TOGN	**UART1_TXD**	TIM2_CH2	-	**TXD can be reused (CX32L003 UART1_RXD or GPIO or I2C_SCL)**
4	VSS	-	-	-	-	-	-	-	-	-	-	-	-	CX32L003 GND
5	VCAP	-	-	-	-	-	-	-	-	-	-	-	AIN7	-
6	VDD	-	-	-	-	-	-	-	-	-	-	-	-	CX32L003 VDD 2.5V to 5.5V (VIO voltage max VDD+0.3V)
7	PA3	I/O	-	**PA3**	TIM1_CH3N	PCA_CH2	SPI_NSS	RTC_1HZ	LPUART_RXD	PCA_ECI	VC0_OUT	TIM2_CH3	-	**AUX can be reused (CX32L003 GPIO IN/OUT)**
8	PB5/X32K_IN	I/O	X32K_IN	PB5	TIM1_BKIN	PCA_CH4	SPI_CLK	I2C_SDA	UART0_RXD	TIM11_TOG	LVD_OUT	TIM2_CH1	-	**LLCC68 SX_NRESET IN <= CX32L003 GPIO OUT**
9	PB4/X32K_OUT	I/O	X32K_OUT	PB4	LPTIM_GATE	PCA_ECI	**SPI_NSS**	I2C_SCL	UART0_TXD	TIM11_TOGN	-	-	-	**LLCC68 SPI NSS IN <= CX32L003 SPI NSS (OUT)**
10	PC3/AIN1	I/O	-	**PC3**	TIM1_CH3	TIM1_CH1N	-	I2C_SDA	UART1_TXD	PCA_CH1	1-WIRE	TIM2_CH3	AIN1	**LLCC68 DIO1 (IN/OUT) <=> CX32L003 GPIO (safe IN)**
11	PC4/AIN2	I/O	-	PC4	TIM1_CH4	TIM1_CH2N	-	I2C_SCL	UART1_RXD	PCA_CH0	CLK_MCO	TIM2_CH4	AIN2	-
12	PC5/VCIN1	I/O	-	PC5	TIM1_BKIN	PCA_CH0	**SPI_CLK**	-	LPUART_TXD	TIM11_GATE	LVD_OUT	TIM2_CH1	VCIN1	**LLCC68 SPI SCK IN <= CX32L003 SPI SCK (OUT)**
13	PC6/AIN0	I/O	-	PC6	TIM1_CH1	PCA_CH3	SPI_MOSI	-	LPUART_RXD	TIM11_EXT	CLK_MCO	TIM2_CH4	AIN0	CX32L003 Test IO (Requires PCBite probe)
14	PC7/SWDIO	I/O	SWDIO	PC7	TIM1_CH2	PCA_CH4	SPI_MISO	-	UART1_RXD	LIRC_OUT	LXT_OUT	-	-	CX32L003 SWD SWDIO (Requires PCBite probe)
15	PD1/SWDCLK	I/O	SWDCLK	PD1	-	PCA_ECI	-	-	UART1_TXD	HIRC_OUT	VC0_OUT	-	-	CX32L003 SWD SWDCLK (Requires PCBite probe)
16	PD2/VCIN0/AIN3	I/O	-	**PD2**	TIM1_CH2	PCA_CH2	SPI_MISO	RTC_1HZ	LPUART_TXD	LPTIM_TOG	1-WIRE	-	AIN3/VCIN0	**LLCC68 BUSY OUT => CX32L003 GPIO IN**
17	PD3/AIN4	I/O	-	**PD3**	TIM1_CH3N	PCA_CH1	SPI_MOSI	HXT_OUT	**UART0_RXD**	LPTIM_TOGN	-	TIM2_CH2	AIN4	**M0 can be reused (CX32L003 GPIO IN/OUT or UART0_RXD)**
18	PD4/VCIN4	I/O	-	**PD4**	TIM1_CH1	PCA_CH0	RTC_1HZ	TIM10_TOG	**UART0_TXD**	TIM10_EXT	BEEP	TIM2_CH1	VCIN2	**M1 can be reused (CX32L003 GPIO IN/OUT or UART0_TXD)**
19	PD5/AIN5	I/O	-	PD5	TIM1_CH1N	PCA_CH4	**SPI_MISO**	I2C_SCL	UART1_TXD	TIM10_GATE	UART0_TXD	TIM2_CH4	AIN5	**LLCC68 MISO OUT => CX32L003 SPI MISO (IN)**
20	PD6/AIN6	I/O	-	PD6	TIM1_CH2	PCA_CH3	**SPI_MOSI**	I2C_SDA	UART1_RXD	LPTIM_EXT	UART0_RXD	TIM2_CH2	AIN6	**LLCC68 MOSI IN <= CX32L003 SPI MOSI (OUT)**